1076 NADI SANGAM SCHOOL

HOME STUDY PACKAGE 24

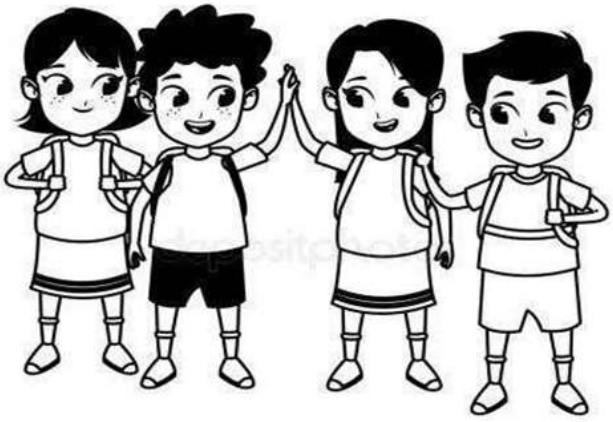

YEAR 6

1076 NADI SANGAM SCHOOL

YEAR 6

HOME STUDY PACKAGE 24

MATHS-REVISION

SHORT ANSWER	**Working**	**Answer**
1. What is the sum of two right angles?		
2. **X** **Z** 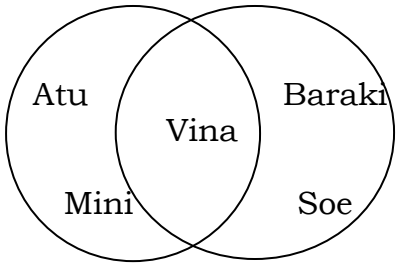 The number property of set **Z** is ☐		
3. Fish 220g | Milo 785g | Rice 5kg What is the total weight of the items?		
4.The next number in the pattern 4, 8, 7, 14, 13, 26 …..		
5. A car uses 1.5 litres of petrol to travel 3km. How far will the car go in 6 litres of petrol?		

6. During hibiscus festival, the organizers collected 25 hundred dollar notes, 6 ten dollar notes and 2 five dollar notes.

a. What is the total amount of money collected from the hundred dollar notes?

b. Find the total amount of money collected during the festival?

7. Study the table and complete it.

x	3	4	5	6
y	5	7	9	11

(a) Write a rule for the pattern shown.

(b) Use the rule to find y if **x is 9.**

8. Mr. Sam deposited **$8,000** in the bank.
The bank paid an interest of **$120** per year.

(a) How much money would he get as interest for the **first year**?

b) How much money altogether would he have in his account after the **second** year?

9. Write down the operations that will make the number sentence below true.

a. 25 x 4 = (20 ____ 4) + (5 ____ 4)

b. 0.15 + 0.17 = _____

1076 NADI SANGAM SCHOOL

YEAR 6

HOME STUDY PACKAGE 24

ENGLISH -REVISION

COMPREHENSION

Cyclones

Cyclones are tropical[1] storms that start in the ocean waters near the equator.[2] The storm moves its way north where the air is cooler. The wind gets stronger and the rain gets heavier. The "eye of the storm" is located in the centre of the storm. It is the storm's calmest part. There is no rain in the eye and it can spread across 20 miles. The winds around the eye can blow as much as 200 miles per hour and is the strongest. They have the ability to uproot trees from of the ground. They can also blow glass out of windows.

In the Pacific Islands, November – April is the Cyclone season. Every new season, tropical cyclones are labelled. The names follow alphabetical order, and alternate between male and female names. For example, the first hurricane may be Hurricane Bibi, Eric, Evan, Kina, Luci, etc.

Hurricanes can last up to 14 days long. They travel for thousands of miles across the ocean. Most of the time they never reach the coast, but when they do hit the coast, conditions become very dangerous. When water levels rise, there can be floods and ***mudslides***.[3] Houses close to the shore can be wiped out, and the people who live there can be in grave danger. When the hurricane is over, the conditions are worst leaving victims with no water, food supply, no electricity, homes and even death to the loved ones. Therefore, we need to take ***precautionary*** measures to be safe

QUESTIONS

1. Tropical storms start at
   A. the eye.
   B. the equator.
   C. the poles.
   D. on the coast.

2. At which place the wind is the ***strongest***?
   A. at the eye
   B. around the eye
   C. far away from the eye
   D. outside the cyclone

3. When is the Cyclone season in Fiji?

A. April - November
B. November – April
C. April - October
D. November - May

4. Read the following sentences:

"When water levels rise, there can be floods and mudslides. Houses close to the shore can be wiped out, and the people who live there can be in grave danger."

As used in the passage, the word ***grave*** most nearly means

A. a burial site.
B. life-threatening.
C. little.
D. vague.

5. The word '***mudslide***' *line 11* is same as _____.

A. sea level rise
B. soil erosion
C. landslide
D. tsunami

6. '***Precautionary***' -*line 14* means _____.

A. safety
B. healthy
C. useful
D. dangerous

7. How long a cyclone can last up to?

A. 1 week
B. 2 weeks
C. 3 weeks
D. 1 month

8. The question below is an incomplete sentence. Choose the answer that best completes the sentence.

Hurricanes can be very dangerous for people on the coast, _____ when water levels rise.

A. except
B. especially
C. unless
D. before

9. What is the **main idea** of this passage?

A. Cyclones are intense storms that can cause major damage.
B. Cyclones are only a concern in some parts of the Pacific.
C. Cyclones are named and categorized for scientific purposes.
D. Cyclones and tornadoes are two very different kinds of storms.

10. Which statement best describes this passage?

A. The passage explains how hurricanes differ from other storms.
B. The passage explains the ways we can prepare for cyclone
C. The passage tells about cyclones and its effects.
D. The passage tells about the past cyclones.

1076 NADI SANGAM SCHOOL
YEAR 6
HOME STUDY PACKAGE 24
HINDI - REVISION

Comprehension

बुलबुल

एक शाम की बात है । रमन, सरस और मदन खेकते खेलते बगीचे मे पहुँचे । वहाँ जामुन के पेड़ पर मदन ने एक बुलबुल को बैठा देखा । वह वही जाकर खड़ा हो गया जहाँ ऊपर पेड़ पर बुलबुल बैठी थी । बुलबुल के पास ही उसका नन्हा बच्चा बैठा जामुन खा रहा था । मदन ने एक ढेला उठाया और बुलबुल की ओर फैका ।

अभ्यास १ - इस कहानी को पढ़ो ।

अभ्यास २: - इन वाक्यों को पूरा करो

१. एक शाम _____

२. वह वही जाकर _____

३. मदन ने एक _____

ख. इन शब्दों का विलोम शब्द लिखो ।

उदाहरण: जोर – धीरे

१. गर्मी ---------- २. मूर्ख ----------

३. गुस्सा ---------- ४. मृत्यु ----------

५. राजा ----------

ग. इन शब्दों की वर्तनी सुधार कर लिखो ।

१. समाग्री ---------- २. अभीनेता ----------

३. परिक्षा ---------- ४. पताल ----------

५. कृपया ----------

घ. इन शब्दों के लिंग बदल कर लिखो ।

१. श्रीमान ---------- २. शेर ----------

३. बुढ़िया ---------- ४. मजदूर ----------

5. बंदरिया ----------

1076 NADI SANGAM SCHOOL

YEAR 6

HOME STUDY PACKAGE 24

GENERAL SUBJECTS REVISION

SECTION A MULTIPLE-CHOICE QUESTIONS

Circle the letter of the best answer

1. Which industry earns the highest foreign exchange in Fiji?

A. Sugar B. Garment

C. Tourism D. Agriculture

2. In which particular year European settlements began in Levuka?

A. 1822 B. 1830

C. 1835 D. 1840

3. The circuit diagram below is of a _____ circuit

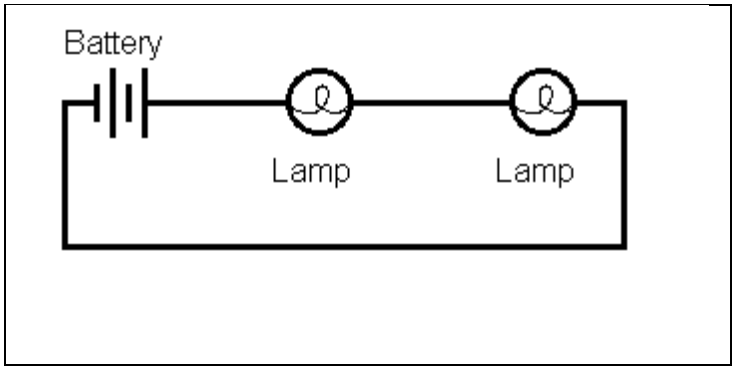

A. series C. straight

B. parallel D. diagonal

4. Beqa Island is well known for _____.

A. hot springs B. red prawns

C. fire walking D. shark diving

5. More flooding will cause soil _____.

A. gain

B. erosion

C. degradation

D. conservation

6. During heavy rain the soil loses some of its _____ .

A. manure

B. fertilizers

C. nutrients

D. composts

7. A common characteristic for birds is that they have _____.

A. fins C. beak

B. gills D. teeth

SECTION B TRUE /FALSE

Read the following statements carefully. **Write (T) for True or (F) for** False against the number.

1. The tourism industry provides work to many people in Fiji.
2. A constitution protects its citizens.
3. To have a new car is an example of a need.
4. The natural environment has changed a lot as a result of human activities.
5. Humans are mammals.
6. Paper is a synthetic material.
7. Kerosene is renewable.
8. Regular exercise helps maintain a healthy nervous system.
9. Jealousy doesn't create conflicts.
10. A fracture is a cracked or broken bone.